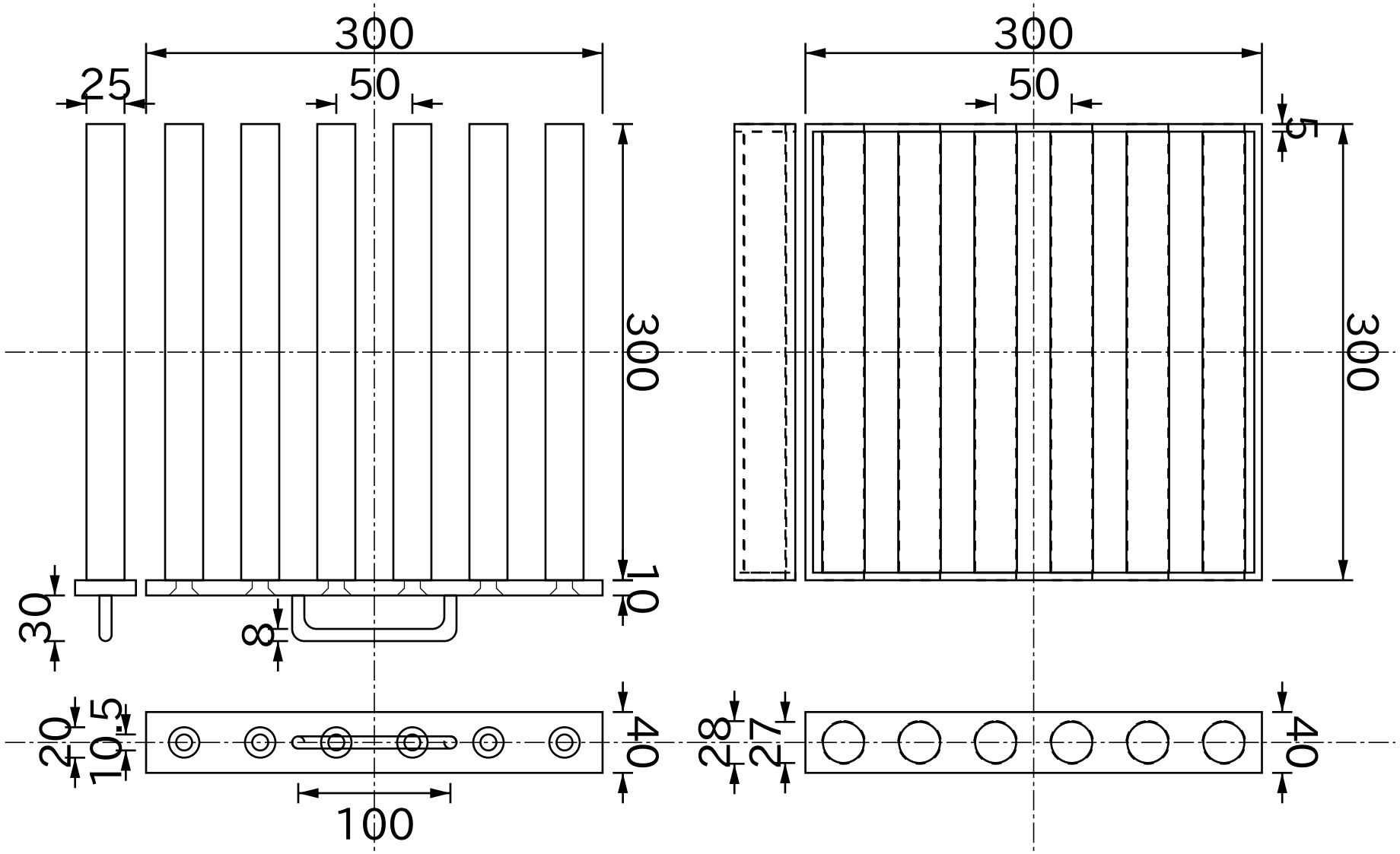

TITLE					
Magnetic Filter L300mmXW300mmXH40mm Frame/Sheath/Drawer					
DRAWING NUMBER	MATERIAL	GRADE	SURFACE	DATE YYYY/MM/DD	APPROVED
MFE30	Magnetic Filter	316	Polish	2015/01/31	Magfine Corporation

All specifications are subject to change without notice.

Copyright © 2000-2025 Magfine Corporation All Rights Reserved.