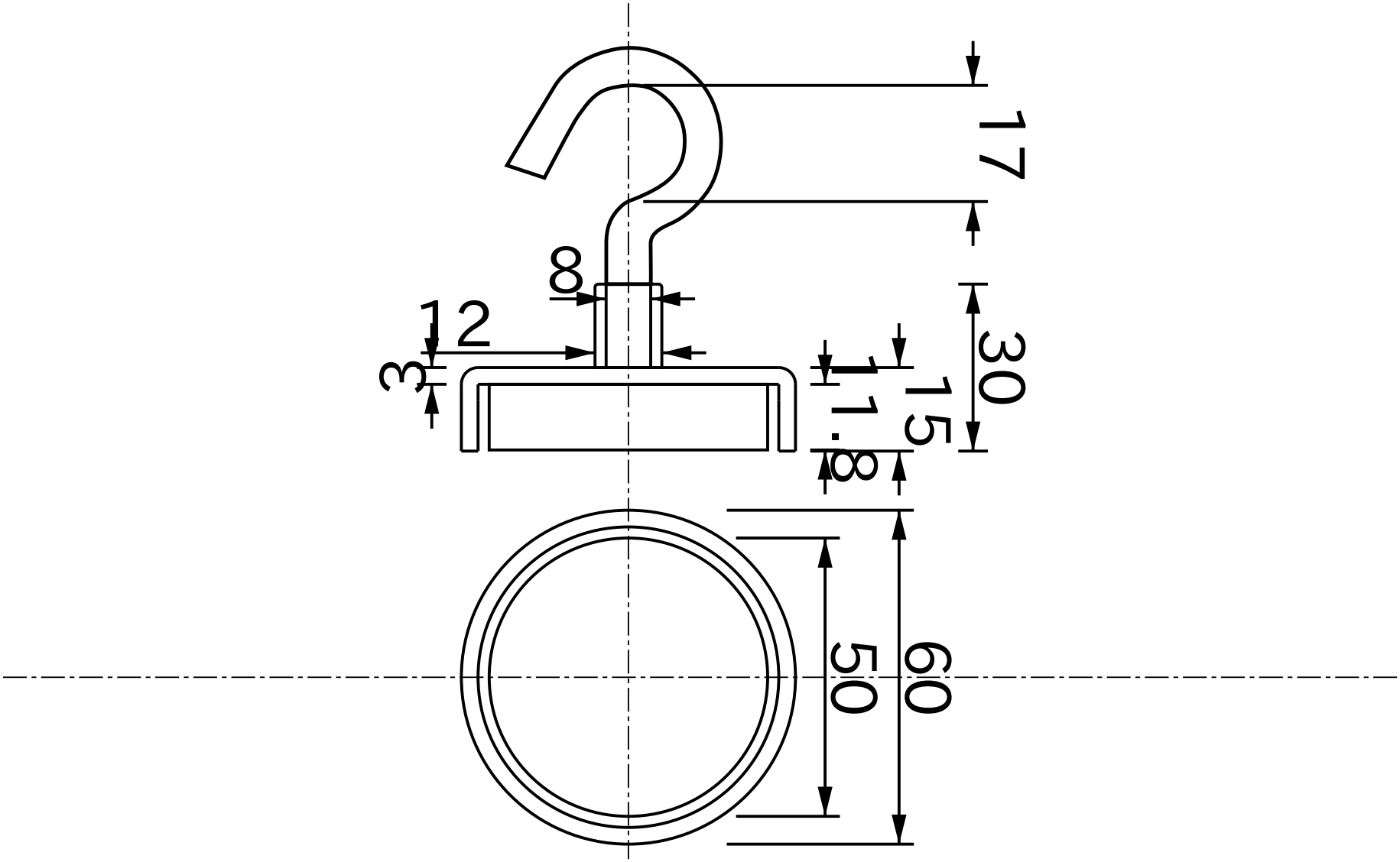

TITLE					
Pot Cap Neodymium Dia60mmX15mm Hook S-pole					
DRAWING NUMBER	MATERIAL	GRADE	SURFACE	DATE YYYY/MM/DD	APPROVED
E60	Pot Cap Neodymium	35	Ni	2017/06/20	Magfine Corporation

All specifications are subject to change without notice.

Copyright © 2000-2025 Magfine Corporation All Rights Reserved.